ROAD RANGER®

FORD RANGER D.C. 2012

Item Code **Codice Articolo** *Réference Article*	*GPO/295/IX* *DSP/295/IX*

GB

STAINLESS STEEL OVAL GRAND PEDANA/DESIGN SIDE PROTECTION

ITA

GRAND PEDANA OVALE/PROTEZIONE LATERALE DESIGN IN ACCIAIO INOX

FR

GRAND PEDANA OVALE/PROTECTION LATERALE DESIGN EN ACCIER INOX

FORD RANGER D.C. 2012

Part List
Lista della bulloneria
Liste des piéces

A TE 8X20 x 8	B Ø 8 x8	C Ø 8 x 8	D TE 10X20 x 8	E Ø 10 x 8
F Ø 10 x 8	G GPO/295/A x 2	H GPO/295/B x 2	I Cappelletti M8 x 8	
				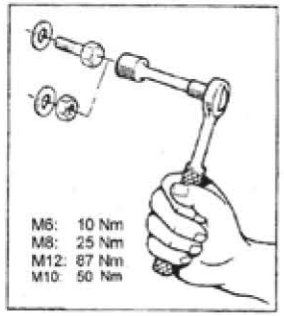

ROAD RANGER®

FORD RANGER D.C. 2012

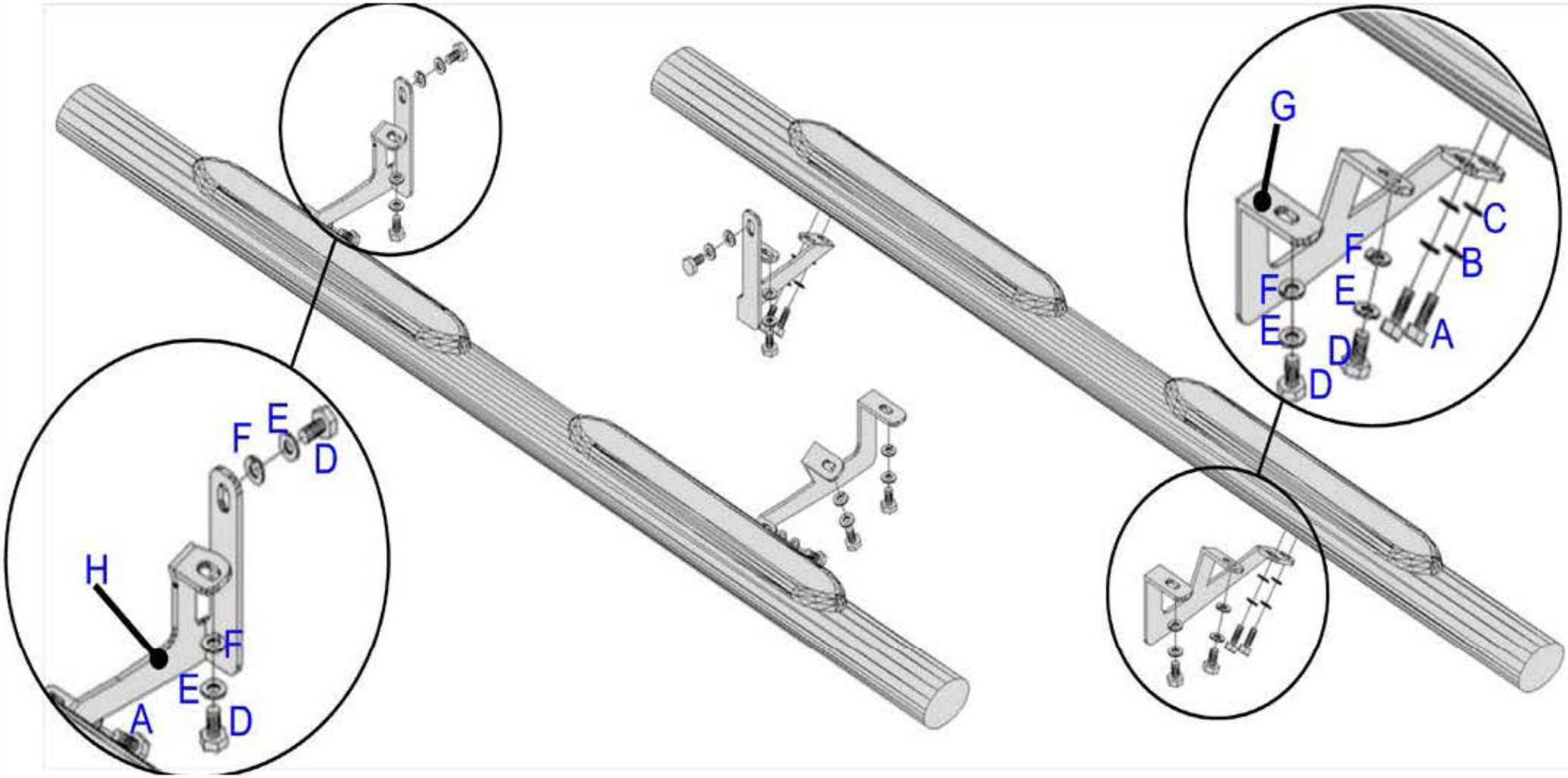

FRONT SIDE PARTE ANTERIORE *PARTIE ANTERIEURE*

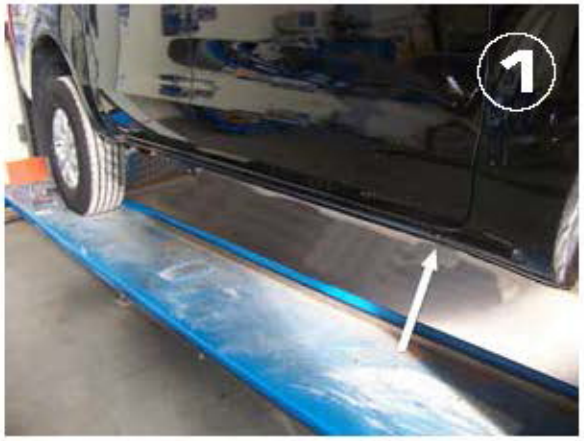

Date **Data** *Date*	Item Code **Cod. Articolo** *Réf. Article*	Vehicle model **Modello Veicolo** *Modèle de Voiture*
19/01/12	*GPO/295/IX* *DSP/295/IX*	***FORD RANGER D.C.*** ***2012***

ROAD RANGER®

REAR SIDE PARTE POSTERIORE *PARTIE POSTERIEURE*

Date **Data** *Date*	Item Code **Cod. Articolo** *Réf. Article*	Vehicle model **Modello Veicolo** *Modèle de Voiture*
19/01/12	*GPO/295/IX* *DSP/295/IX*	***FORD RANGER D.C.*** ***2012***

ROAD RANGER®